American Backflow Specialties
(800) 66-BKFLO (619) 527-2525 Fax: (619) 527-2527
www.americanbackflow.com

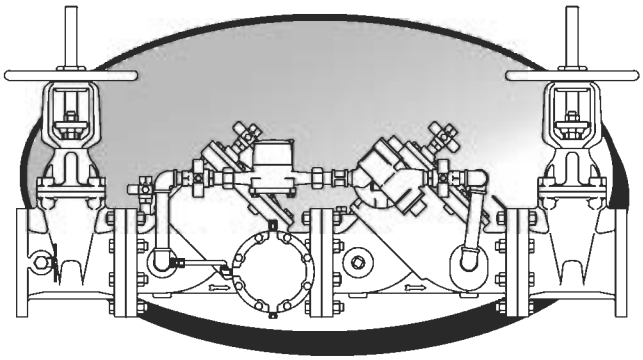

CLA-VAL™

Model RD7L
Reduced Pressure Detector Check
2-1/2" to 10"

FEATURES

- Durable construction
- Fire service backflow protection
- Detects sprinkler system leaks
- Detects unauthorized usage
- Easy field testing via test cocks
- Internal components rugged and durable

SPECIFICATIONS

Reduced pressure detector assembly shall consist of a mainline reduced pressure configured back-flow assembly in parallel with a reduced pressure by-pass assembly.
In a nonflow condition the check valves on the bypass and mainline units are closed. Pressure between the checks is maintained at 5 psi lower than at the inlet valve. The the differential between the zone and upstream pressure drops below 2 psi, the differential relief valve will open to maintain proper zone differential. The bypass will operate identiacally to the mainline assembly. The bypass opens to detect initial flow and the main-line opens for all other flows.

APPLICATIONS

Automatic fire sprinkler systems containing toxic substances.

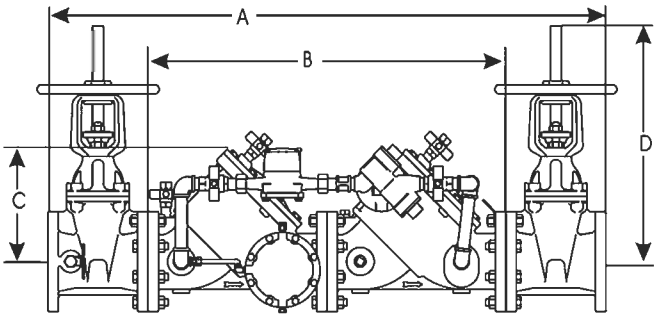

INSTALLATION

The Reduced Pressure Detector Assembly should be installed horizontally with a suggested minimum clearance of 12" between the assembly and the floor or grade. They must be installed where discharge from the relief valve will not be objectionable and can be positively drained away. They should be installed where easily accessible for testing and maintenance and must be protected from freezing. Thermal water expansion and/or water hammer downstream of the backflow preventer can cause excessive pressure. Excessive pressure situations should be eliminated to avoid possible damage to the system and assembly.

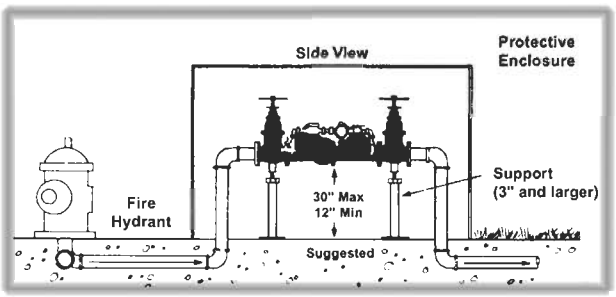

DIMENSIONS & WEIGHTS

Size	A	B	C*	D	E	Net Wt.	Net Wt.
2 1/2	37 3/16	22 1/16	16	7 1/2		243	134
3	41 11/16	25 9/16	22 1/4	8 1/2		298	154
4	50 7/16	32 5/16	23 3/4	11		469	194
6	59 11/16	38 9/16	32 5/8	14		752	397
8	69 3/16	46 1/16	41 7/8	18		1207	537
10	84 3/16	58 1/16	50 1/2	22		1617	957

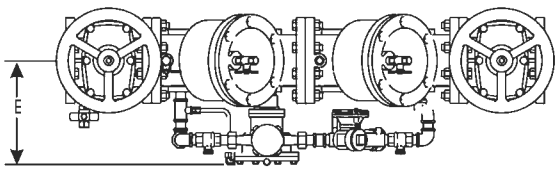

Model RD7L

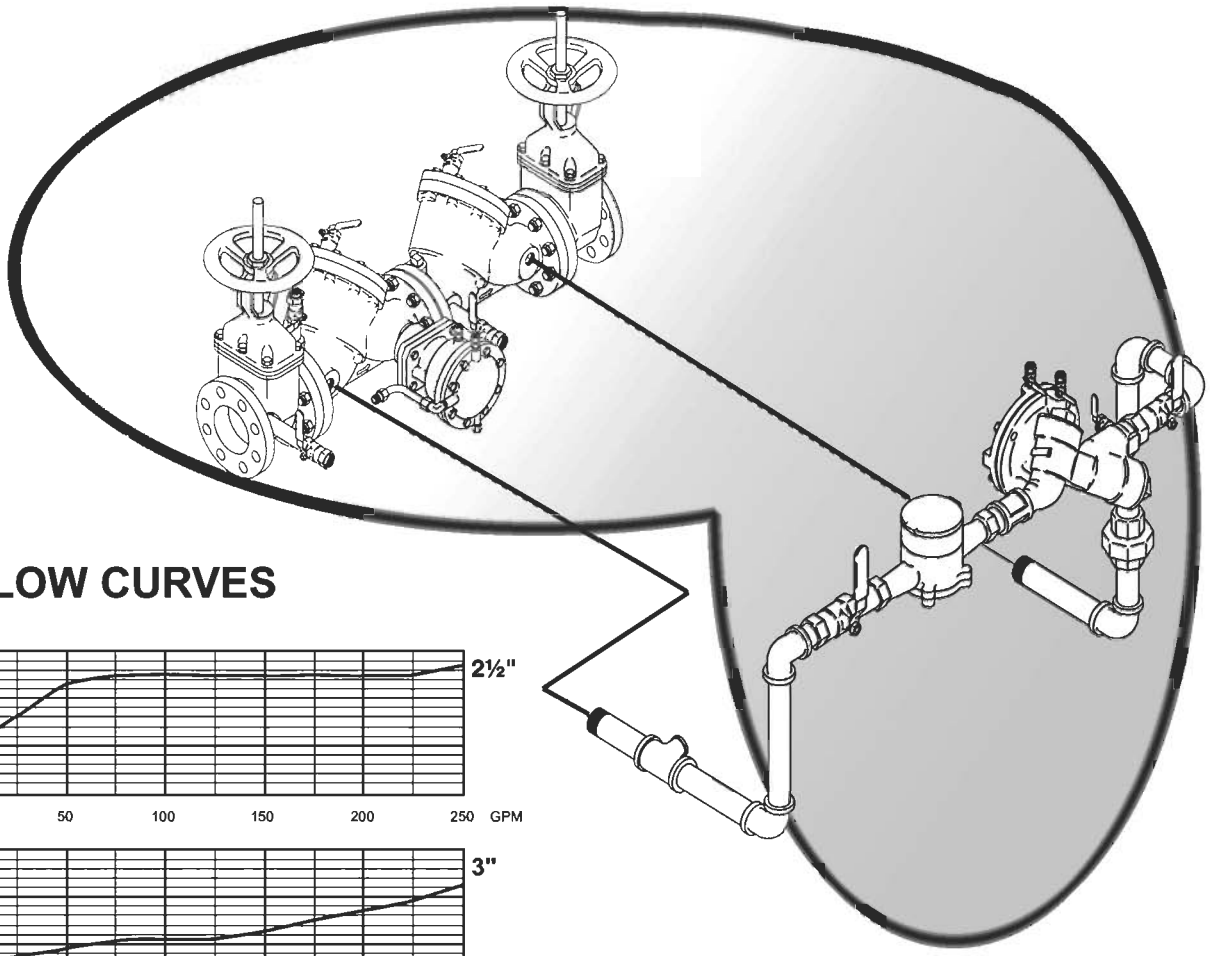

FLOW CURVES

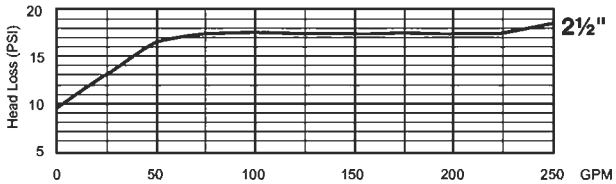

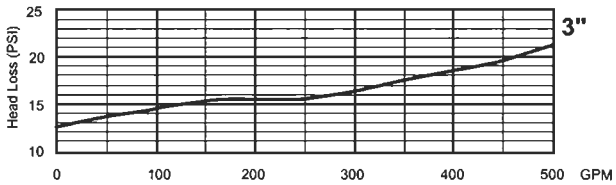

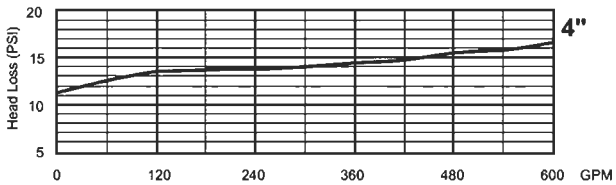

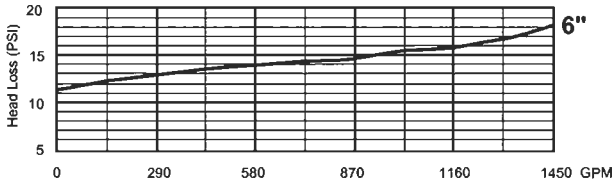

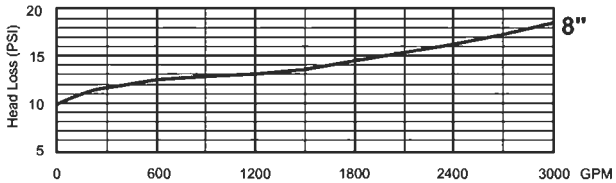

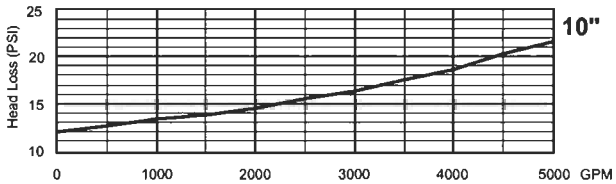

CHARACTERISTICS & MATERIALS

Maximum working pressure	175 PSI
Hydrostatic test pressure	350 PSI
Temperature range	32°F to 140°F
Fluid	Water
End detail	Flanged
Main valve body epoxy coated internal	Ductile iron grade 65-45-12 10-20 mils
Internal check assembly	Stainless steel
Trim	Bronze
By-pass valve body	Bronze
By-pass meter	Totalizing,1 to 20 gpm size 5/8" x 3/4"
Mainline shut-off valves	OS&Y, UL/FM
Elastomers:	Nitrile Diaphragm: Nitrile, fabric reinforced

American Backflow Specialties

www.americanbackflow.com

(800) 66-BKFLO

(619) 527-2525

Fax: (619) 527-2527