Repair Kits & Parts

Most parts are similar to 825YD and can be found in that part's section

Relief Valve With ByPass: Model 826YD (These parts correspond to diagram on opposite page)

Item No.	Description	2½	3	4	6	8	10
9	1st Check Spring	780-349	780-350	630-142	630-143	630-144	630-145
9	2nd Check Spring	630-140	630-141	780-778	780-779	780-780	780-781
42	Resilient Wedge OS&Y Gate Valve	780-891	780-893	780-895	780-897	780-899	780-901
61	ByPass Kit	905-127	905-127	905-127	905-127	905-127	905-127
61.1	Meter (Std.-Gal.)	780-666	780-666	780-666	780-666	780-666	780-666

For a list of all other individual parts, see model 825YD.

Exploded View Model 825YD (Similar to 826YD)

MODEL 826YD

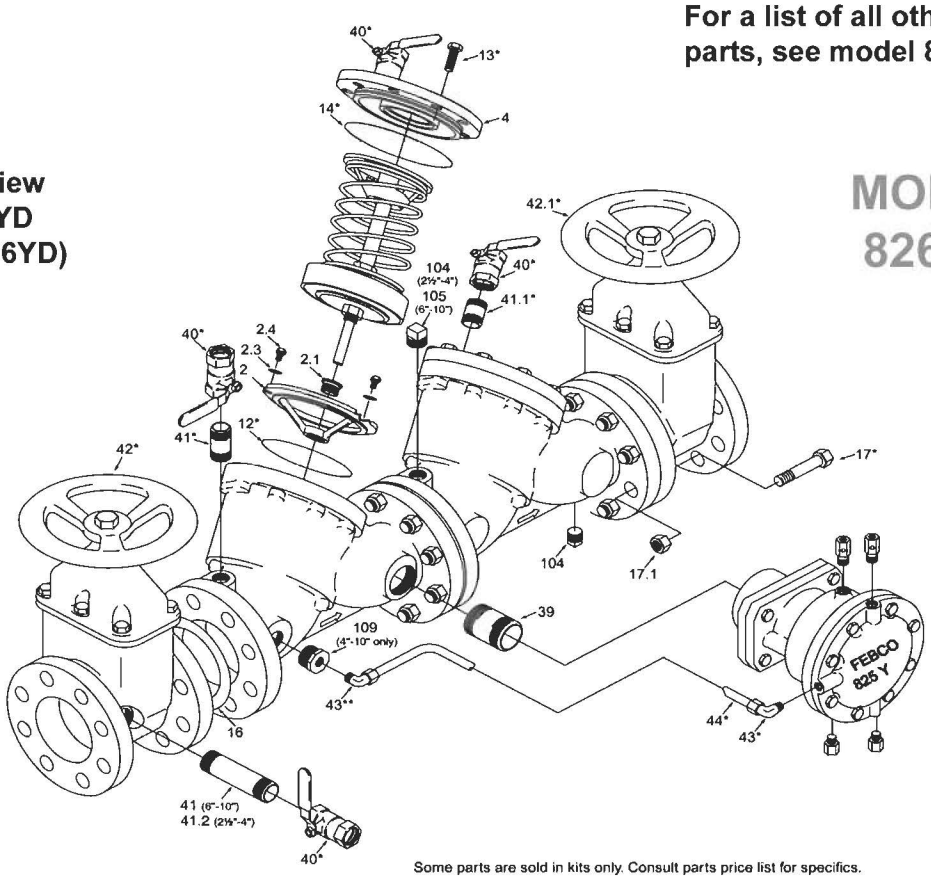

Some parts are sold in kits only. Consult parts price list for specifics.

Assemblies & Kits for 825YD

DESCRIPTION	SIZE 2½"	SIZE 3"	SIZE 4"	SIZE 6"	SIZE 8"	SIZE 10"
Spring Assembly #1 Check (3, 4A, 5, 6, 7, 7A, 7B, 10, 11, 15, 51)	905-085	905-087	902-466	902-468	902-470	902-472
Spring Assembly #2 Check (3, 4A, 5, 6, 7, 7A, 7B, 9, 10, 11, 15, 51)	905-086	905-088	902-467	905-469	902-471	905-473
Seat Ring Kit (2, 2A, 2C, 2D, 12)	902-386YD	902-385YD	902-384YD	902-383YD	902-382YD	902-381YD
Rubber Parts, CI & DI Boddies (11, 14, 51)	905-059	905-060	905-061	905-062	905-063	905-064
Large Mounting Kit (16, 17, 17A, 17B, 40, 41, Both Ends)	905-036	905-037	905-038	905-039	905-040	905-041
Relief Valve Assy (Type YD Only) (21 - 50)	905-100	905-100	905-100	905-101	905-101	905-101
Relief Valve Kit - Rubber (26, 27, 27A, 31A, 32)	905-102	905-102	905-102	905-102	905-102	905-102
Relief Valve Seat Ring Kit (22A, 22B, 36, 36A, 36B)	905-103	905-103	905-103	905-103	905-103	905-103
Internal Modular Assembly - Relief Valve Kit	905-104	905-104	905-104	905-104	905-104	905-104